MEASUREMENT RECORD

Installation (ship): Recon Piston Crown Engine type: MAN27/38 Engine No:

Fuel viscosity (cSt): Temperature (°C): 20 Engine running hours:

Piston ring groove height

Component running hours before measurement:

Engine equipped with antipolishing ring (APR): ☒ Yes ☐ No

	Nominal height (mm)	Wear limit (mm)
Groove I	6,17 + 0,03	6,42
Groove II	6,12 + 0,03	6,37
Groove III	6,12 + 0,03	6,37
Groove IV	8,04 + 0,03	8,17

Measuring positions

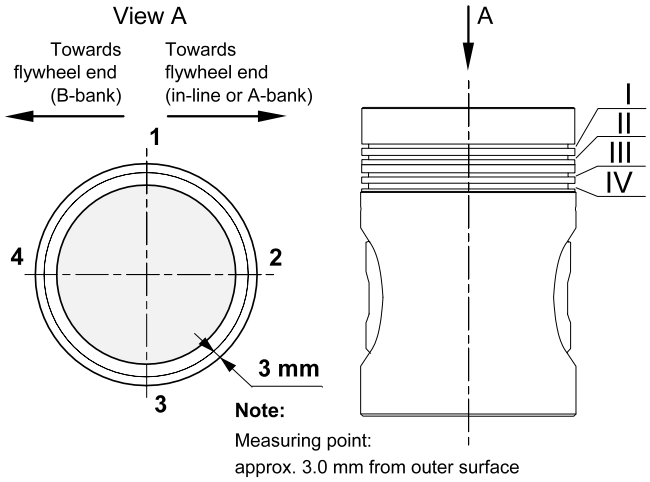

Note:
Measuring point:
approx. 3.0 mm from outer surface

Bank		Cylinder number								
		1	2	3	4	5	6	7	8	9
Piston ring groove height (mm)										
I	1	6,20								
	2	6,20								
	3	6,23								
	4	6,21								
II	1	6,17								
	2	6,16								
	3	6,17								
	4	6,16								
III	1	6,16								
	2	6,15								
	3	6,16								
	4	6,16								
IV	1	8,07								
	2	8,07								
	3	8,08								
	4	8,07								
Remarks/ Manufact No.		See Pic								

Date of measurement: 10/4-14 Place: Frederikshavn Name: Nilas Hygum